# FALCON BAR400

16 x 20W RGBW
IP65 LED BAR

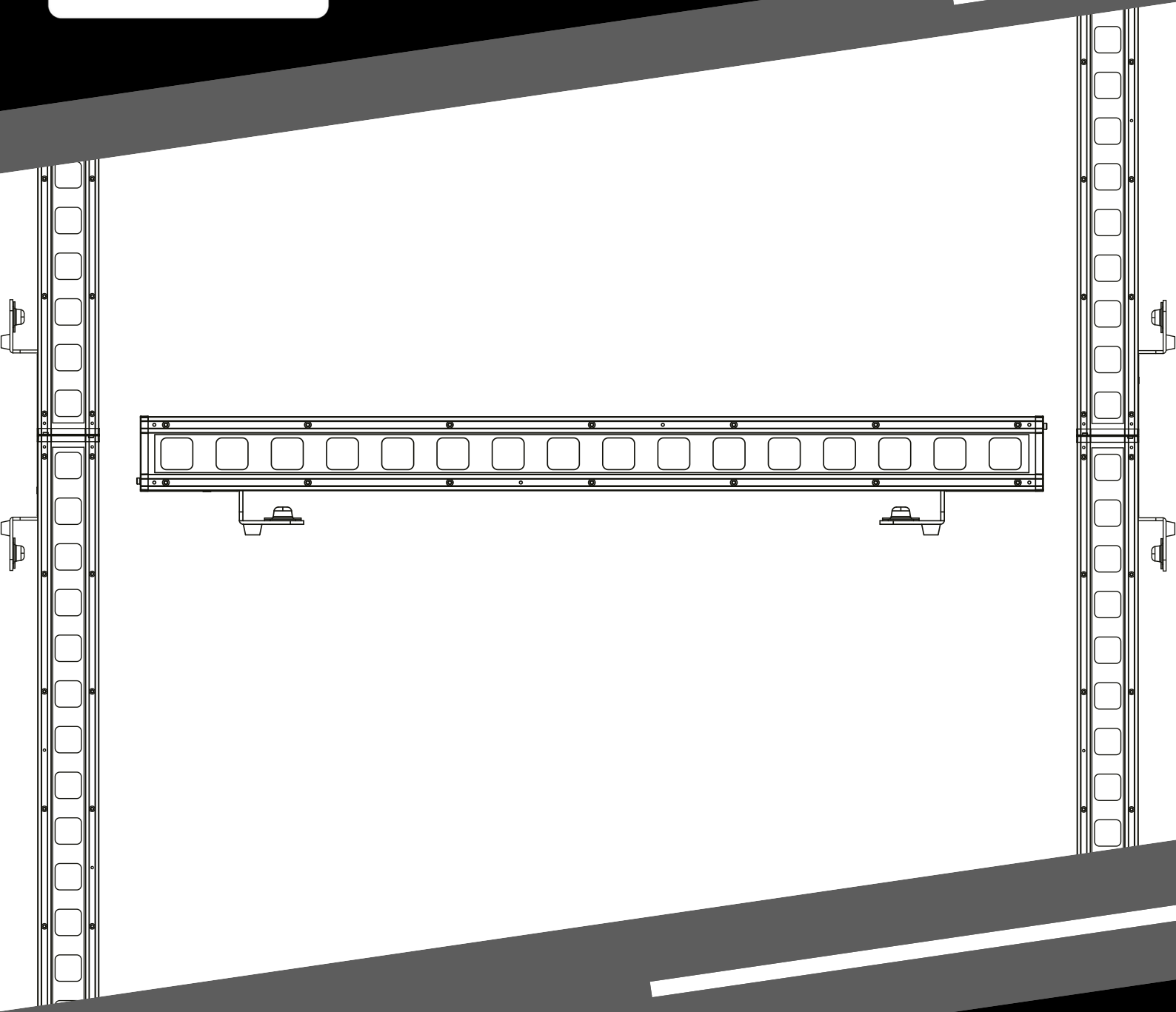

WWW.EAGLELITE.EU

INFO@EAGLELITE.DK

# Content

Info about the product ..... 3
Product Features ..... 3
General information before use ..... 4
Safety instructions ..... 5
Uses ..... 5
Danger from electricity ..... 6
Instructions for using the device. ..... 6
Service and maintenance of the device. ..... 7
Cleaning and maintenance ..... 7
Unpacking/Setup ..... 8
Rigging ..... 9
DMX Guide ..... 10
RDM (Remote Device Management) ..... 11
Power setup ..... 13
Accessory ..... 14
Description of the device ..... 15
Backpanel ..... 15
Front ..... 16
Size measured in mm ..... 17
Lux Measurements ..... 18
Display ..... 18
Seamless splicing & compatibility ..... 19
Mounting and Splicing Instructions ..... 19
Led Pixel Zones ..... 21
Menu overview ..... 22
Software update guide ..... 26
Specifications ..... 27
DMX CHART ..... 28
3CH Mode ..... 28
4CH Mode ..... 28
9CH Mode ..... 28

13CH Mode ..... 29
25CH Mode ..... 29
32CH Mode ..... 30
64CH Mode ..... 31
73CH Mode ..... 33
MACRO & FUNCTION LIST ..... 36
Function List ..... 36
AUTO LIST ..... 36
AUTO SPEED LIST ..... 37
Strobe List ..... 38
Color Macro List (3CH Mode) ..... 38
CTO List (3CH Mode) ..... 39
Color Macro List (other modes) ..... 40
Company info ..... 42

# Info about the product

Thank you for choosing the Eagle Lite Falcon BAR400. This manual is designed to provide you with all the necessary information to understand, set up, and operate your new high-power IP65 LED Bar safely and effectively. The Falcon BAR400 is a robust and versatile lighting fixture, engineered for professional applications requiring dynamic color mixing, strobe, and wash effects.

## Product Features

The Eagle Lite Falcon BAR400 is a professional-grade LED bar packed with features for outstanding performance and reliability:

- **Powerful Light Source:** Equipped with 16 high-output 20W RGBW LEDs.
- **Adjustable Colour Temperature:** 2500K – 10,000K range for flexible white balance.
- **Versatile Operating Modes:** Offers DMX-512, Master/Slave, and Auto Run modes to suit various control requirements.
- **Flexible DMX Control:** Multiple DMX channel modes available: 2, 4, 6, 11, 24, 32, 64 & 71 Channels for precise control.
- **Dynamic Effects:** Built-in color macros, CTO adjustment, strobe functions, and pixel mapping.
- **Smooth Dimming:** 16-Bit dimmer, Includes 4 selectable dimmer curves for seamless intensity adjustments.
- **Passive Cooling:** Natural convection cooling, no fan noise.
- **User-Friendly Interface:** A clear TFT display combined with four intuitive control buttons allows for easy menu navigation and setup.
- **Durable Construction:** Housed in a rugged aluminium body designed for touring and demanding environments.
- **IP65 Rated:** Fully protected against dust ingress and low-pressure water jets from any direction, making it suitable for outdoor use.
- **RDM Capable:** Supports RDM (Remote Device Management) for convenient remote addressing, configuration, and status monitoring.

## General information before use

**Accountability and attention are requested when using the device.**
With high-voltage electricity, there is a danger of shock when touching exposed wires.

**Risk of eye damage**
Never look directly into the light source. Always wear protection if it is necessary to look directly into the light source.

**Always check that you are using the product correctly!**
Correct voltage in relation to the specifications specified on the device or manual. Be sure that the device is always grounded. Never open the unit until power is taken off! Check periodically that the cord is not pinched or damaged of any kind. Always check the device and cord time to time. When replacing a fuse, it must be replaced with the same type and rating.

**For your own safety** and understanding of the device, we strongly recommend that the manual be read through before using the product. Always read warnings and recommendations before use.

**Warning: Hot surface**
This symbol indicates that the device may become hot in certain places on the device. The device may become hot during use. Therefore, it is recommended to let the device cool for at least 10 minutes after use. In this way, injury is avoided and best cared for on the device.

**Should only be operated by qualified persons.**
We strongly recommend that all persons who will be using the device do the following, read the manual before using the device, are qualified to use the device, and can rig equipment properly.

## Safety instructions

### Uses

- The Falcon BAR400 is an LED lighting fixture designed for creating decorative and dynamic lighting effects in professional event technology, such as on stages, in clubs, for architectural illumination, and at festivals.
- It is not designed or suitable for standard household room illumination.
- Use this device only as described in this manual. Any other use may lead to damage to the unit and void the warranty. Eagle Lite accepts no liability for damages resulting from improper use or failure to comply with these instructions.

## Danger from electricity

- IP65 Rating: While the fixture is IP65 rated for outdoor use, ensure that all power and DMX connections are also IP65 rated and properly sealed to maintain protection against water and dust ingress.
- Do Not Open: To reduce the risk of electric shock, do not open any part of the fixture's housing unless explicitly instructed for maintenance by qualified personnel and with the unit disconnected from power.
- Proper Outlet & RCD: Connect the device only to a properly installed mains socket outlet protected by a Residual Current Device (RCD) or Ground Fault Circuit Interrupter (GFCI).
- Grounding: The fixture must be connected to an earthed (grounded) mains supply. Never disable or bypass the protective earth connection of the power cord or fixture.
- Wet Hands: Never touch the power plug or fixture with wet or damp hands.
- Disconnect Power: Always disconnect the fixture from the mains power supply during thunderstorms, before cleaning, or when it will not be used for an extended period. Pull by the plug, not the cord.

## Instructions for using the device.

- **Operating Temperature:** The specified ambient operating temperature range for the Falcon BAR400 is −20∘C to +40∘C (−4∘F to 104∘F). Do not operate the device outside this range.
- **Surface Temperature:** The housing of the fixture can reach high temperatures during operation (up to 65∘C or more). Avoid direct contact by personnel and keep flammable materials at a safe distance.
- **Ventilation & Clearance:** Ensure a minimum distance of 0.5 meters (20 inches) between the fixture and any flammable materials or illuminated surfaces. Maintain adequate ventilation around the unit; do not cover any ventilation openings.
- **Photosensitive Epilepsy:** Strobe effects can trigger epileptic seizures in photosensitive individuals. Be cautious when using intense strobe effects in public areas.
- **Secure Installation:** Ensure the fixture is installed securely by qualified personnel to prevent it from falling. Comply with all relevant local and national safety standards and regulations for rigging and overhead mounting (e.g., EN 60598-2-17).
- **Secondary Safety Attachment:** When mounting the fixture overhead, it MUST be secured with a secondary safety attachment, such as an appropriately rated safety cable, attached to a suitable load-bearing point on the fixture and the support structure. The safety cable must be capable of holding at least 10 times the weight of the fixture.
- **Restricted Area:** Ensure the area below the installation site is clear and restricted during rigging, de-rigging, and servicing operations.
- **Experienced Installers:** Overhead mounting requires extensive experience, including calculating working load limits, knowledge of installation materials, and periodic safety inspections. If you lack these qualifications, do not attempt the installation yourself. Installations should be checked by a skilled person at least once a year.
- **Mounting Positions:** The Falcon BAR400 can be operated in any mounting position (horizontal, vertical, or angled) provided it is securely fastened.

## Service and maintenance of the device.

- The device is not designed for permanent operation; therefore, it is important to the device for consistent operational breaks. This helps to ensure service life without defects.
- Never turn the device on and off at short intervals. This will significantly reduce the service life.
- If the device has been subjected to drastic temperature fluctuations, do not turn it on immediately. The arising condensation can destroy the device. Allow the device to reach ambient temperature before connecting. Wait until condensation has evaporated.
- After use, the unit must always be allowed to cool before it is derigged if this is not complied with, and the unit is subsequently defective. The warranty does not apply.
- Please use the original packaging to protect the device from vibration, dust and moisture during transport or storage.
- If a serial number label is mounted to the device, do not remove the label as this will void the warranty.

## Cleaning and maintenance

Regular cleaning and maintenance are essential for ensuring optimal performance and longevity of your Falcon BAR400.

- **Disconnect Power:** Always disconnect the fixture from the power supply and allow it to cool completely before performing any cleaning or maintenance.
- **Exterior Cleaning:** Periodically clean the exterior housing and lenses to remove dust, dirt, and other residues. Use a soft, lint-free cloth. For stubborn dirt, the cloth can be slightly dampened with a mild cleaning solution (e.g., glass cleaner for lenses, mild detergent for housing).
- **Avoid Solvents:** Never use aggressive solvents, alcohol, or abrasive cleaners, as they can damage the surfaces or optical components.
- **Dry Thoroughly:** Ensure no moisture enters the fixture. The unit must be completely dry before reconnecting it to the power supply.
- **IP65 Connectors:** Regularly inspect IP65 rated connectors for damage or wear to their seals. Ensure connector caps are used when ports are not in use to maintain IP rating.
- **Internal Maintenance:** There are no user-serviceable parts inside the Falcon BAR400 beyond what may be instructed by authorized personnel. Do not open the housing unless qualified. Internal cleaning (e.g., fan cleaning) should only be performed by authorized service technicians.
- **Spare Parts:** If spare parts are needed, use only genuine Eagle Lite original parts or equivalents specified by Eagle Lite.
- **Service:** All service and repair operations should be carried out by authorized Eagle Lite dealers or qualified service technicians.

## Unpacking/Setup

- Upon receiving your Falcon BAR400, carefully unpack it and check for any damage that may have occurred during transportation.
- If the shipping carton appears damaged, inspect the fixture immediately.
- In case of damage, or if parts are missing, contact your dealer or Eagle Lite customer service. Do not operate a damaged fixture.
- It is advisable to keep the original packaging for future transportation or storage. If custom flight cases are used, ensure they provide adequate protection against vibration, dust, and moisture.

**Warning of the risk of overheating.**

The distance between the Device and the illuminated surface must be more than 1.5 m (19.7 inches).

Prober ventilation is very important.

The temperature around the device should never exceed 45 °C (113 °F).

**When using racks, structures etc.**

When mounting the device on a tripod, ensure that the stand is in a secure and stable position and that the weight of the device does not exceed the maximum allowable load capacity of the stand.

**Possible source of error for data errors**

To ensure flawless operation, use dedicated DMX cables and not regular XLR/microphone cables.

Never connect the DMX input or output to audio equipment such as mixers or amplifiers. As this can cause great damage!

**Possible damage to the device associated with moisture.**

Moisture that can enter open (plugs and couplings) by DMX or power cables can cause short circuits. Therefore, it is very important that the lid is closed if the plug is not being used, and only use IP65 rated connectors Cables etc. Available as an accessory at (www.eaglelite.dk)

## Rigging

The Falcon BAR400 can be mounted in various orientations. Always ensure that any supporting structure (truss, stand, etc.) is capable of safely supporting the weight of the fixture(s) and any dynamic loads.

- **Mounting Brackets:** Use the included Fast Lock (Omega) mounting brackets to attach rigging clamps (not included). The brackets attach to the underside of the fixture. Ensure the fast-lock mechanisms are fully engaged.
- **Clamps:** Use appropriately rated rigging clamps to secure the fixture to trusses or pipes.
- **Overhead Mounting:**
    - When mounting overhead, a secondary safety attachment (e.g., safety cable) is MANDATORY.
    - Attach the safety cable through the designated safety cable attachment points on the fixture's chassis and secure it to a separate, reliable anchoring point on the rigging structure.
    - The safety cable must be rated to hold at least 10 times the weight of the fixture.
    - Ensure there is no slack in the safety cable that would allow the fixture to drop significantly if the primary mounting failed but allow enough for normal movement if applicable.
- **Orientation:** The fixture can be hung upside-down, mounted sideways, or placed on a stable, flat surface. Ensure stability in all positions.
- **Working Area:** Always secure the working area below when rigging, de-rigging, or servicing the fixture.
- **Regular Inspection:** Periodically inspect all rigging hardware, brackets, clamps, and safety attachments for any signs of wear, fatigue, or damage. Replace any suspect components immediately.

Explanation of DMX Connections

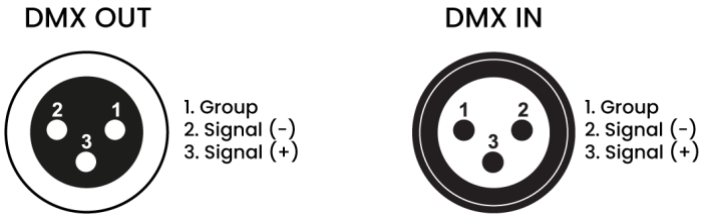


**DMX Cable Connectors**

The fixture is equipped with 3-pin and/or 5-pin XLR connectors for DMX input and output. Cabling must have a male XLR connector on one end and a female XLR connector on the other.

**Caution:** Do not allow contact between the common (ground/shield) and the fixture's chassis ground if they are separate. Grounding the common can cause a ground loop, and your fixture may perform erratically. Test cables with an ohmmeter to verify correct polarity and to ensure pins are not grounded or shorted to the shield or each other.

**DMX Connection & Termination**

1. Connect the DMX output of your controller to the DMX IN port of the first Falcon BAR400 fixture in the chain.
2. Connect the DMX OUT port of the first fixture to the DMX IN port of the second fixture.
3. Continue daisy-chaining fixtures in this manner (OUT to IN).
4. **DMX Terminator:** On the DMX OUT port of the LAST fixture in the DMX chain, it is highly recommended to install a DMX terminator. A terminator is an XLR connector (male) with a 120 Ohm, 1/4W resistor connected between Pin 2 (DMX-) and Pin 3 (DMX+). Termination reduces signal errors and reflections, especially in long cable runs or noisy environments.

## RDM (Remote Device Management)

The Falcon BAR400 supports RDM, which allows for two-way communication over the DMX line with compatible RDM controllers. RDM enables features such as:

- Remote DMX address setting
- Fixture mode changes
- Sensor monitoring (e.g., temperature)
- Error reporting
- Fixture identification

RDM operates on the same DMX512 cabling. Ensure your DMX controller and any DMX splitters in the line are RDM compatible to utilize these features. RDM packets use non-zero start codes and will not interfere with standard DMX512 devices that do not recognize RDM.

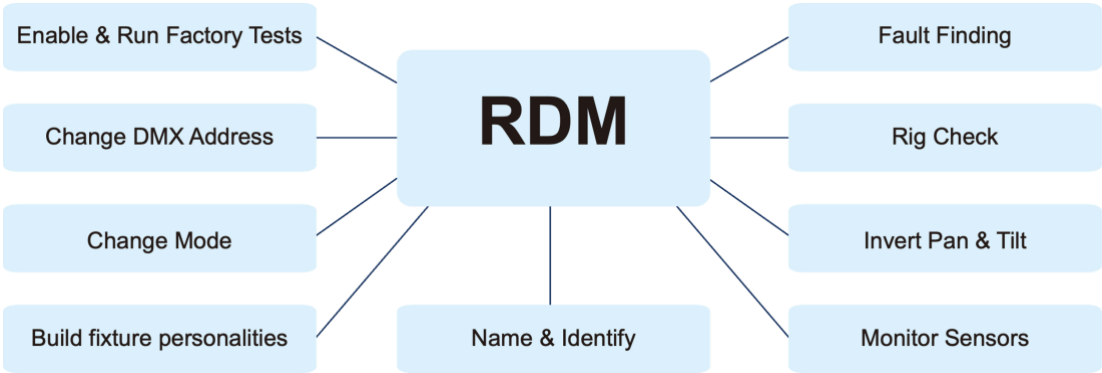

## RDM INFORMATION

- Manufacturer's ID:0718h
- Manufacturer Label: Eagle Lite
- Model Description: FALCON BAR400
- Model ID: 000d
- Device Label: BAR400

| Parameter ID | Command "Discovery" | Command "Set" | Command "Get" |
|---|---|---|---|
| **DISC_UNIQUE_BRANCH** | ✓ | | |
| **DISC_MUTE** | ✓ | | |
| **DISC_UN_MUTE** | ✓ | | |
| **DEVICE_INFO** | | | ✓ |
| **SUPPORTED_PARAMETERS** | | | ✓ |
| **SOFTWARE_VERSION_LABEL** | | | ✓ |
| **DMX_START_ADDRESS** | | ✓ | ✓ |
| **IDENTIFY_DEVICE** | | ✓ | ✓ |
| **DEVICE_MODEL_DESCRIPTION** | | | ✓ |
| **PARAMETER_DESCRIPTION** | | | ✓ |
| **MANUFACTURER_LABEL** | | | ✓ |
| **DEVICE_LABEL** | | ✓ | ✓ |
| **FACTORY_DEFAULTS** | | ✓ | ✓ |
| **BOOT_SOFTWARE_VERSION_ID** | | | ✓ |
| **BOOT_SOFTWARE_VERSION_LABEL** | | | ✓ |
| **DMX_PERSONALITY** | | ✓ | ✓ |
| **DMX_PERSONALITY_DESCRIPTION** | | | ✓ |
| **SLOT_INFO** | | | ✓ |
| **SLOT_DESCRIPTION** | | | ✓ |
| **SENSOR_DEFINITION** | | | ✓ |
| **SENSOR_VALUE** | | | ✓ |
| **DEVICE_HOURS** | | | ✓ |
| **LAMP_HOURS** | | | ✓ |
| **RESET_DEVICE** | | ✓ | |
| **CURVE** | | ✓ | ✓ |
| **DMX_STATE** | | ✓ | ✓ |
| **DIMMER_SPEED** | | ✓ | ✓ |

## Power setup

**Correct Connection**

- The Falcon BAR400 operates on an auto-ranging power supply of AC 110-240V, 50/60Hz.
- Always use the supplied IP65 rated power cable or an equivalent cable with the correct rating.
- Ensure the power source can handle the total current draw of all connected fixtures.
- Standard international wire color coding (ensure consistency with your region if different):
    - Brown: Live (L)
    - Blue: Neutral (N)
    - Yellow/Green: Earth/Ground (PE)

**Power Linking**

The Falcon BAR400 features Power-OUT (IP65 PowerCON compatible) connectors, allowing multiple units to be linked together from a single power source.

- **Power Consumption:** The Falcon BAR400 has a maximum power consumption of 330W.
- **Maximum Linked Units:** The number of units that can be safely linked depends on the mains voltage and the capacity of the circuit breaker supplying the power. Always consult local electrical codes and ensure the total load does not exceed 80% of the circuit breaker's rating.

*As a general guideline (always verify with local regulations and breaker specifications):*

| Voltage: @16A | Number of units |
|---|---|
| 110-120V | 5 |
| 208V | 10 |
| 230-240V | 11 |

**Warning:** Do not exceed the maximum number of linked units. Overloading the circuit can cause breakers to trip or create a fire hazard. *Calculations updated for clarity.*

| **Cable color** | **Connection explanation** | **International characters** |
|---|---|---|
| Brown | Plus | L |
| Blue | Minus | N |
| Yellow/Green | Earth | ⏚ |

## Accessory

**Included Accessories**

- 1 x Power Cable True1
- 1 x DMX Cable IP65
- 2 x Omega 1/4 Turn Clamps
- 1 x User Manual

**Optional Accessories**

The following accessories may be available for purchase separately to enhance the functionality of your Falcon BAR400:

- Barndoors
- Diffusion Filters
- Custom-length IP65 PowerCON and DMX cables
- Heavy-duty rigging clamps
- Flight Cases (e.g., 2in1, 4in1, 6in1) (Made in EU)

Please contact your Eagle Lite dealer for information on available accessories.

## Description of the device

### Backpanel

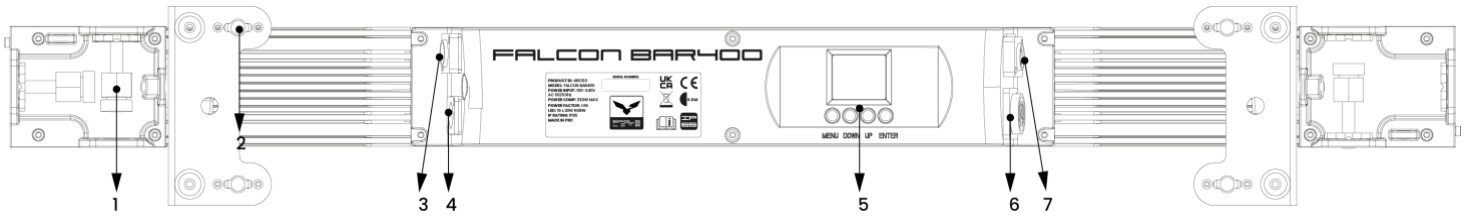


| | |
|---|---|
| **1** | Splice system |
| **2** | Quarter turn bracket mount |
| **3** | DMX 5-Pin In |
| **4** | True1 Power In |
| **5** | Control panel, with buttons [MODE], [UP], [DOWN], [ENTER] |
| **6** | True1 Power out |
| **7** | DMX 5-Pin out |

Front

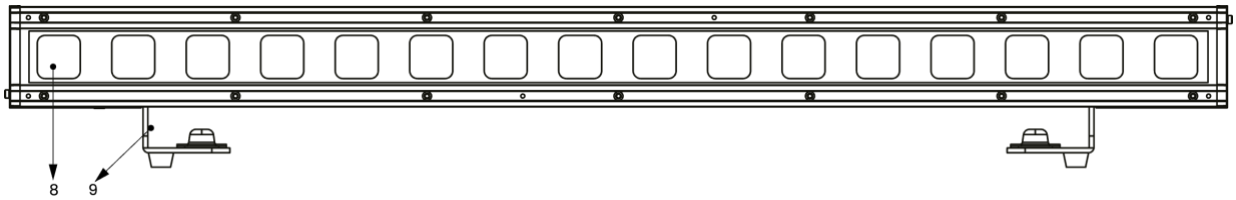


| | |
|---|---|
| **8** | LED Lenses |
| **9** | Moveable feets |

Size measured in mm

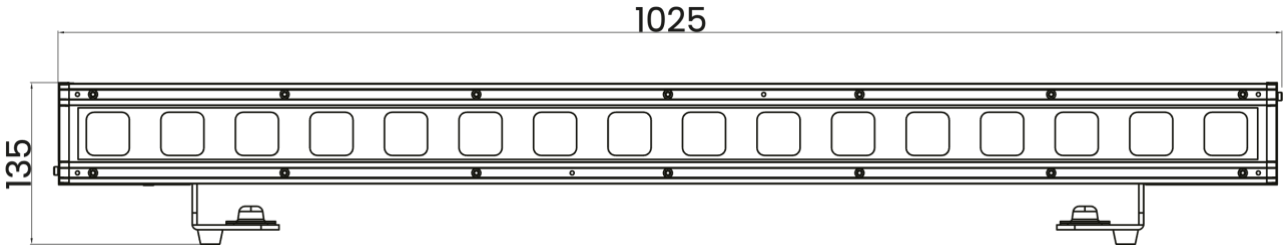


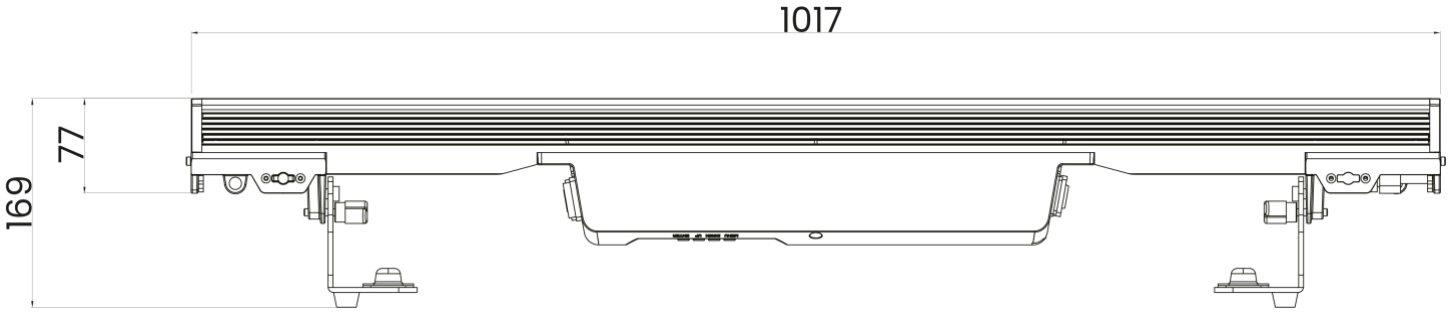


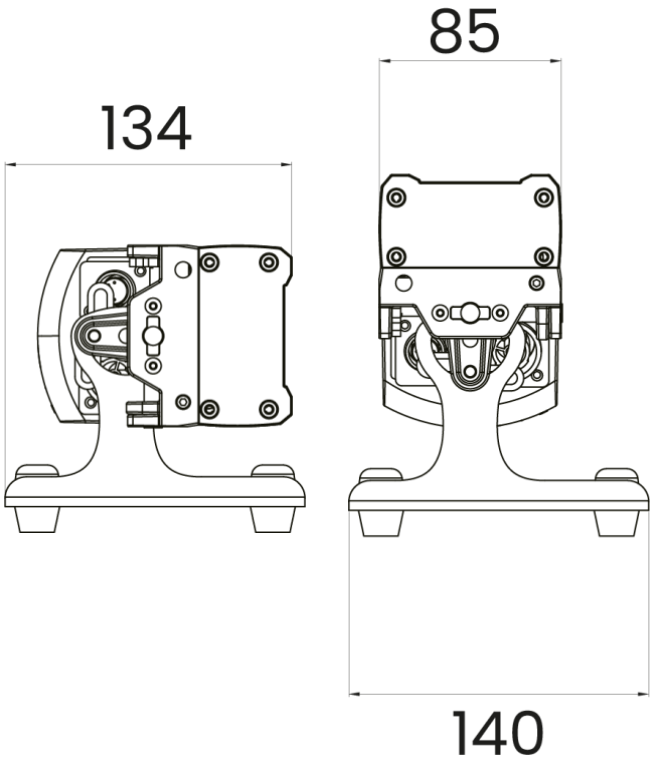

## Lux Measurements

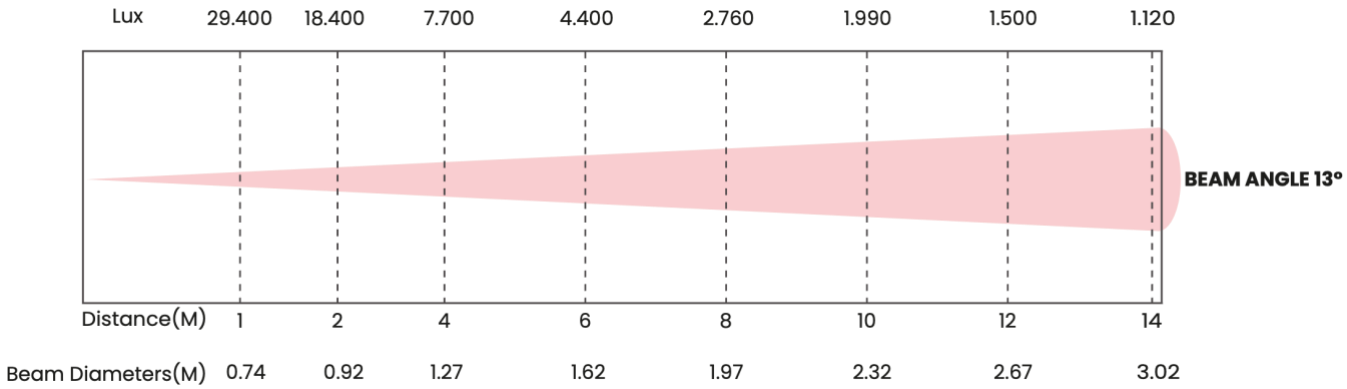


## Display

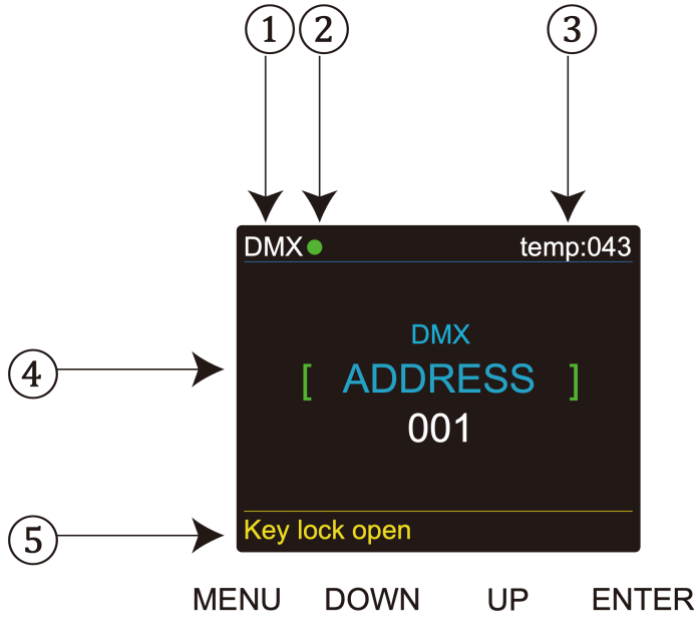


The display provides real-time information and access to the menu system. Key elements typically shown:

1. Mode Indicator: Shows current operating mode (e.g., DMX, SLAVE).
2. Signal Status: A visual indicator (e.g., colored dot) shows DMX signal presence (Green for good signal, Red for interrupted/no signal).
3. Temperature Display: Shows the internal working temperature of the light (e.g., "temp:043"). Color may change (e.g., to yellow) if temperature exceeds a set maximum.
4. Selected Menu/Value: Displays the current menu item or the value being adjusted (e.g., "ADDRESS 001").
5. Key Lock Status: Indicates if the control panel keys are locked or unlocked (e.g., "Key lock open").

## Seamless splicing & compatibility

The Falcon BAR400 has been engineered with uniform diode spacing to enable visually consistent installations when combining multiple units' side by side. This design ensures smooth, continuous light output without visible gaps or irregularities between fixtures.

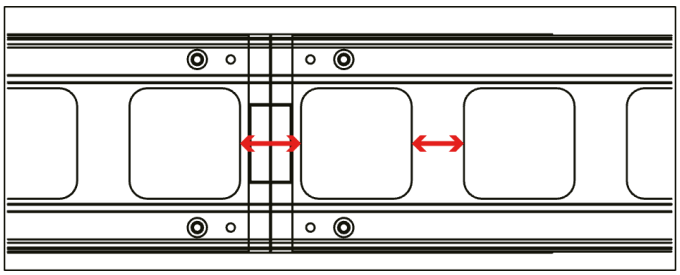

The Falcon BAR400 is fully compatible with the Falcon FX400. Both fixtures share the same housing dimensions, rigging options, and menu structure, making them ideal for creating extended installations with matching visual performance. Fixtures can be mixed and aligned seamlessly, allowing for cohesive setups in professional applications.

### Mounting and Splicing Instructions

The Falcon BAR400 is designed for seamless alignment when installing multiple fixtures in a continuous row. Follow these steps to achieve an even, gap-free installation:

1. Preparation:
   - Ensure all fixtures are powered off and disconnected before assembly.
   - Place the units on a stable surface with the front lenses facing the same direction.

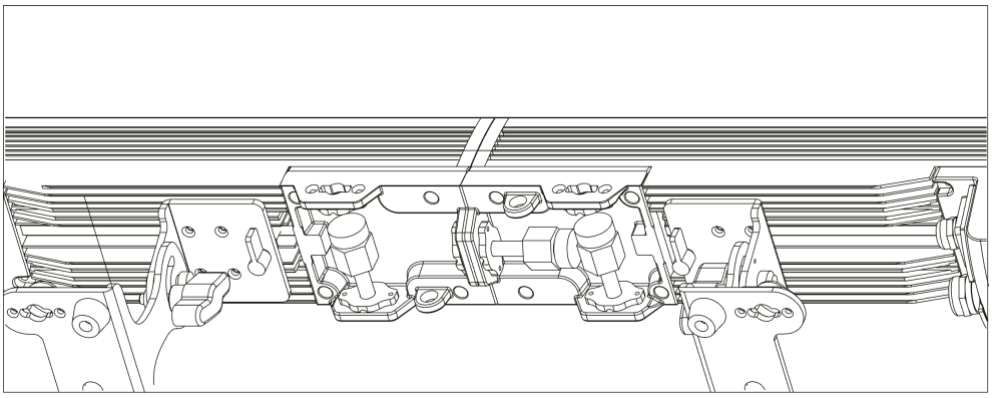

2. Align the Fixtures:
   - Position the units end-to-end so the alignment holes and fast lock points on each side match up precisely.
   - Check that the distance between the lenses is consistent along the entire length. The spacing tolerance should not exceed 2 mm.

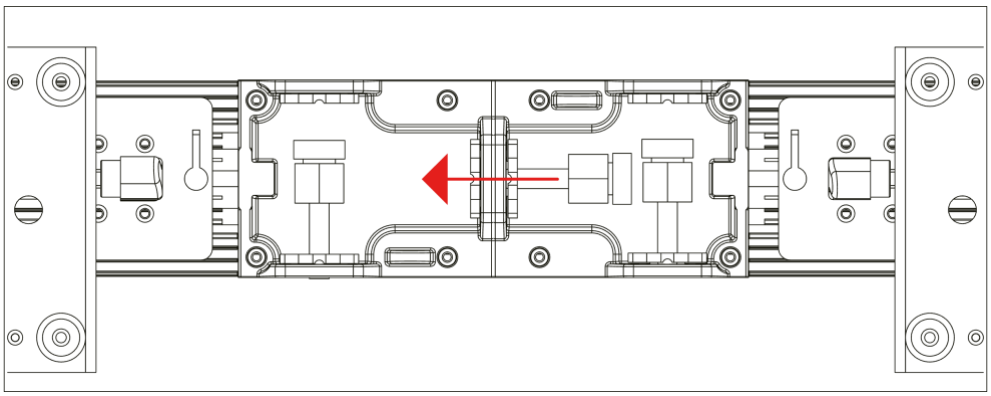

3. Engage the Fast Locks:
   - Press the black fast lock mechanisms firmly.
   - While holding the locks in, use an appropriate tool to rotate each locking knob counterclockwise until the mechanism is fully secured.

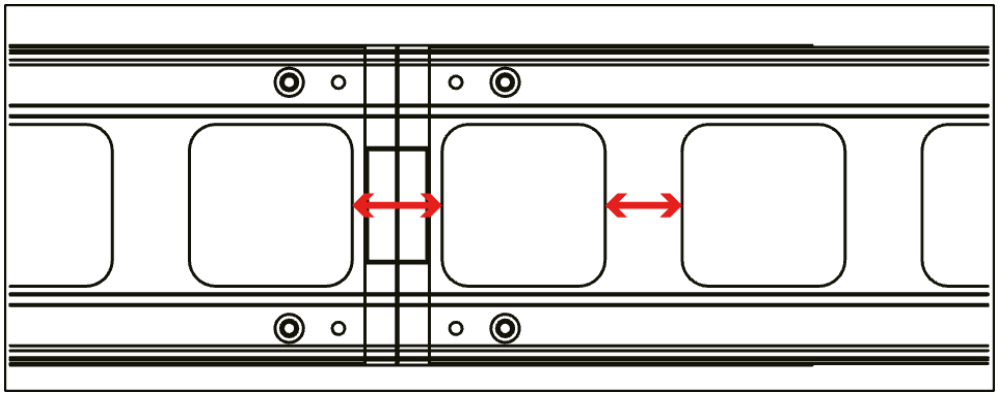

4. Verify the Connection:
   - Inspect the front of the assembled fixtures to confirm a uniform, continuous line without visible steps or gaps.
   - Ensure all locks are correctly engaged and the units are stable.

When properly connected, the Falcon BAR400 fixtures create a seamless visual output, ideal for professional installations that demand a clean, uninterrupted light field.

## Led Pixel Zones

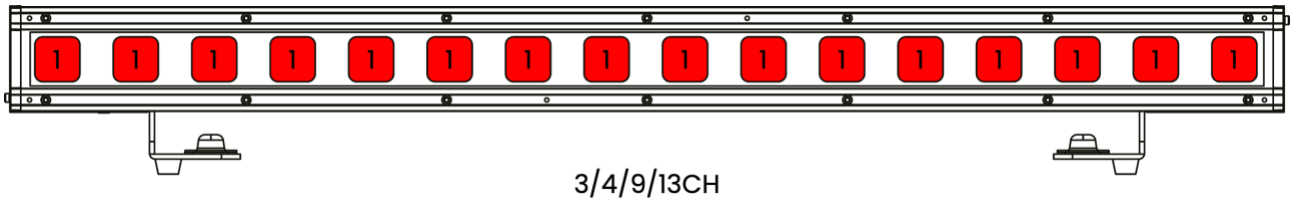


3/4/9/13CH

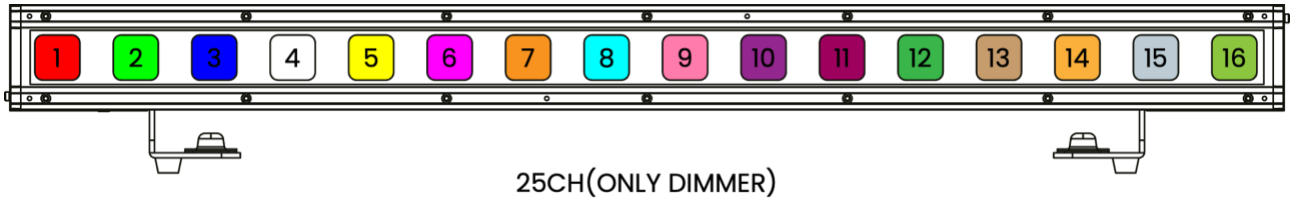


25CH(ONLY DIMMER)

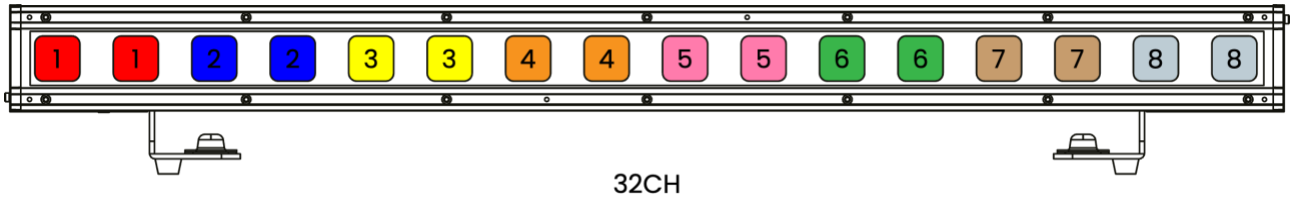


32CH

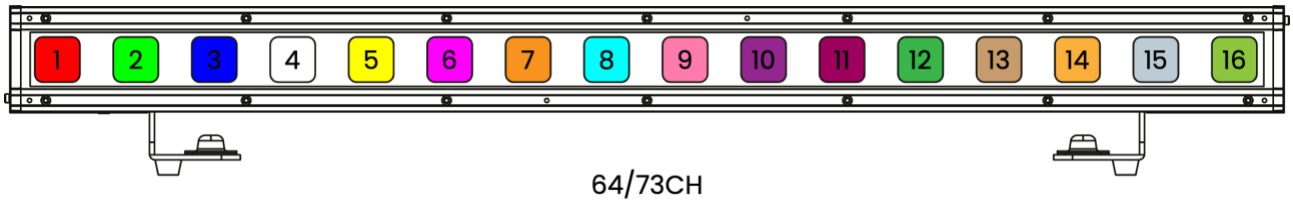


64/73CH

## Menu overview

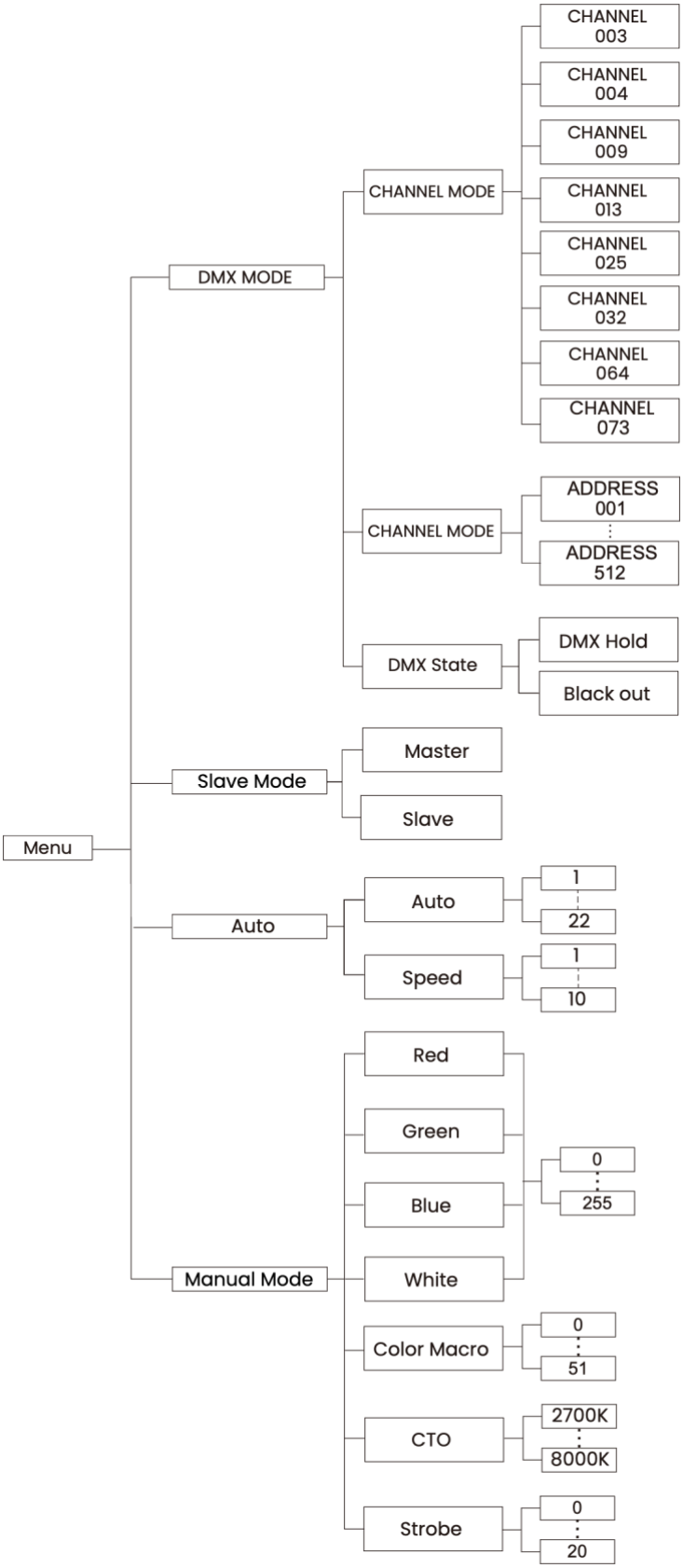

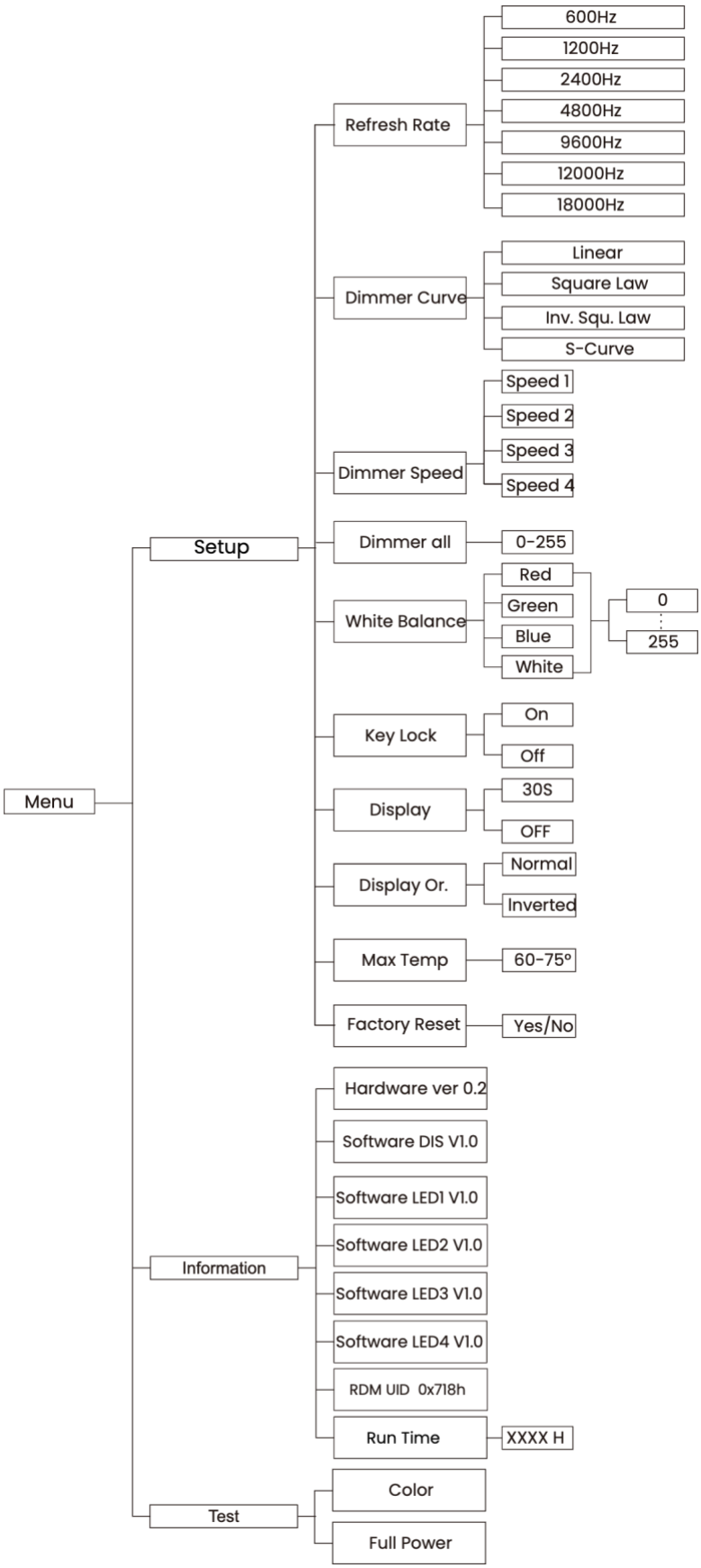
Menu
Setup
Refresh Rate
600Hz
1200Hz
2400Hz
4800Hz
9600Hz
12000Hz
18000Hz
Dimmer Curve
Linear
Square Law
Inv. Squ. Law
S-Curve
Dimmer Speed
Speed 1
Speed 2
Speed 3
Speed 4
Dimmer all
0-255
White Balance
Red
Green
Blue
White
0
255
Key Lock
On
Off
Display
30S
OFF
Display Or.
Normal
Inverted
Max Temp
60-75°
Factory Reset
Yes/No
Information
Hardware ver 0.2
Software DIS V1.0
Software LED1 V1.0
Software LED2 V1.0
Software LED3 V1.0
Software LED4 V1.0
RDM UID 0x718h
Run Time
XXXX H
Test
Color
Full Power

## DMX MODE

Connects the fixture to a DMX controller.

- **Access:** Press **ENTER**, use UP/DOWN to find "DMX MODE", press **ENTER**.
- **Sub-Menus:**
  - **Address:** (Displayed as "XXX", e.g., 001-512)
    - Use UP/DOWN to select the desired DMX starting address. Press **ENTER** to confirm.
  - **DMX Channel:** (Displayed as "Channel [XX]")
  - Use UP/DOWN to select the DMX channel mode (3CH, 4CH, 9CH, 13CH, 25CH, 32, 64, 73). Press **ENTER** to confirm.

## DMX STATE

Defines fixture behaviour upon DMX signal loss.

- **Access:** Press **ENTER**, use UP/DOWN to find "DMX STATE", press **ENTER**.
- **Options:**
  - **BLACKOUT:** Fixture blacks out if DMX signal is lost.
  - **DMX HOLD:** Fixture holds the last received DMX values if signal is lost.
  - Use UP/DOWN to choose, press **ENTER** to confirm.

## SLAVE MODE

Sets the fixture to follow a Master unit.

- **Access:** Press **ENTER**, use UP/DOWN to find "SLAVE Mode", press **ENTER**.
- **Operation:** "SLAVE" will be shown. Press **ENTER** to confirm. The slave unit will now replicate the output of a Master unit (a unit running in Auto Mode or controlled via DMX if configured to output Master signals).

## AUTO MODE

Runs built-in automatic programs.

- **Access:** Press **ENTER**, use UP/DOWN to find "AUTO MODE", press **ENTER**.
- **Sub-Menus:**
  - **SPEED:** (Values 01-10, or a wider range like 0-255 if indicated by the DMX chart for auto speed - supplier manual indicates "AUTO 1-AUTO 31" for programs and "01-10" for speed in this menu context)
    - Adjusts the running speed of the auto programs. Use UP/DOWN to select speed (01-10), press **ENTER**.
  - **AUTO MODE (Program Select):** (AUTO 1 - AUTO 31)
    - Selects the desired built-in automatic program. Use UP/DOWN to choose, press **ENTER**.

## STATIC COLOR

Manually set static colors and strobe effects.

- **Access:** Press **ENTER**, use UP/DOWN to find "STATIC COLOR", press **ENTER**.
- **Sub-Menus:** (Values typically 0-255 for brightness/speed)
    - **RED:** Adjust Red LED brightness (0-255).
    - **GREEN:** Adjust Green LED brightness (0-255).
    - **BLUE:** Adjust Blue LED brightness (0-255).
    - **WHITE:** Adjust White LED brightness (0-255).
    - **COLOR (Macro):** Select from pre-programmed static colors (0-51).
    - **STROBE:** Adjust strobe speed (0-20, representing Hz or steps).
    - Use UP/DOWN for selection/value, press **ENTER** to confirm.

## SET UP

Configure various fixture parameters.

- **Access:** Press **ENTER**, use UP/DOWN to find "SET UP", press **ENTER**.
- **Sub-Menus:**
    - **Dimmer Curve:** Select dimming response (Curve 1, Curve 2, Curve 3, Curve 4).
    - **Dimmer Speed:** Select dimming speed/smoothness (LED, Halogen).
    - **Dimmer ALL:** Master dimmer for all LEDs in manual modes (0-255).
    - **White Balance:** Fine-tune RGBW values for custom white points. (Sub-menus for RED, GREEN, BLUE, WHITE adjustment 0-255).
    - **Key Lock:** Enable or disable control panel key lock (ON/OFF).
    - **Display (Backlight):** Set display backlight behavior (ON, OFF after 30s).
    - **Display Orientation:** Set display to Normal or Inverted.
    - Use UP/DOWN for selection/value, press **ENTER** to confirm.

## INFORMATION

View fixture information.

- **Access:** Press **ENTER**, use UP/DOWN to find "INFORMATION", press **ENTER**.
- **Sub-Menus (View only):**
    - **Hardware Ver:** Displays hardware version (e.g., Hardware ver 1.0).
    - **Software Ver:** Displays software version (e.g., Software ver 2.31).
    - **RDM: UID:** Displays the fixture's RDM Unique ID (e.g., RDM UID 0x718h).
    - **Run Time:** Displays total operating hours of the fixture (e.g., XXXX H).
    - **Max Temp (Setting & Display):**
        - Allows setting a maximum desired working temperature (40−75∘C).
        - The fixture may automatically adjust performance if this temperature is exceeded.
        - The display might also change color (e.g., to yellow) when the current temperature exceeds this user-set maximum.

**FACTORY RESET**

Resets all fixture settings to their default values.

- **Access:** Press **ENTER**, use UP/DOWN to find "FACTORY RESET", press **ENTER**.
- **Confirmation:** Select "Yes" (or confirm action) to proceed with the reset. Select "No" to cancel.
    - Use UP/DOWN to choose, press **ENTER** to confirm.

## Software update guide

The Falcon BAR400 firmware can be updated via DMX using our DMX update box/software.

1. **Preparation:**
    - Connect the fixtures in a DMX chain. The first fixture connected to the update box will act as the Master for the update process.
    - Set the first fixture to Master mode (if applicable for update or simply ensure it's the first in line). Other fixtures can be in Slave mode or simply powered on in the DMX chain.
2. **Connect Update Box:**
    - Connect the DMX output from the update box to the DMX input of the first (Master) fixture.
    - Power on the update box and load the correct firmware file for the Falcon BAR400.
3. **Initiate Update:**
    - Follow the instructions provided with the update box/software to start the upload process.
    - Typically, the fixture's display will indicate that it is receiving data (e.g., "Loading," progress bar, or color change on display background such as "wait" then "loading" and background color change).
4. **Upload Process:**
    - Do not interrupt power or DMX connections during the update.
    - The update may take several minutes. All fixtures in the chain should receive the update.
5. **Completion:**
    - Once the update is successful, the fixture(s) will usually restart automatically with the new firmware. The display should indicate "Upload Success" or similar.
    - Verify the new software version in the "INFORMATION" menu.

Always use official Eagle Lite firmware updates and follow the specific instructions provided with the update utility.

## Specifications

| Description | Data |
|---|---|
| **Light Source** | 16 x 20W RGBW |
| **Beam Angle** | 12° |
| **Field Angle** | 24° |
| **CRI** | 75 |
| **Control modes** | DMX. Auto, Manual, Master/Slave |
| **RDM** | Yes (ANSI/ESTA E1.20 Compliant) |
| **DMX Modes** | 3, 4, 9, 13, 25, 32, 64 & 73 channels |
| **Input connector** | Power: True1 IP65 / DMX: XLR 5-Pin IP65 |
| **Output connector** | Power: True1 IP65 / DMX: XLR 5-Pin IP65 |
| **Power supply** | AC 100 - 240 V 50/60 Hz |
| **Power consumption** | 330W / 1.44A @ 230v |
| **Power Factor** | >0.95 |
| **Start-up power** | 50 A / 375 µs |
| **Standby power compsumption** | 11.5W |
| **Protection class** | IP65 |
| **Cooling** | Natural Convection(Passive Cooling) |
| **Mounting options** | Hanging, spliced, standing. |
| **Housing Material** | Aluminum |
| **Housing Color** | Black(RAL-9004) |
| **Size (WxHxD)** | 1025 x 140 x 192 |
| **Weight** | 9.15 Kg |

# DMX CHART

## 3CH Mode

| 3CH Mode | Function | DMX Value | Description |
|---|---|---|---|
| 1 | Dimmer | 000-255 | Dimmer 0-100% |
| 2 | Colour Macro 1-51 | 000-255 | Choose colours according to the macro list |
| 3 | CTO (2700K-8000K) | 000-255 | See macro list |

## 4CH Mode

| 4CH Mode | Function | DMX Value | Description |
|---|---|---|---|
| 1 | Red | 000-255 | 0-100% |
| 2 | Green | 000-255 | 0-100% |
| 3 | Blue | 000-255 | 0-100% |
| 4 | White | 000-255 | 0-100% |

## 9CH Mode

| 9CH Mode | Function | DMX Value | Description |
|---|---|---|---|
| 1 | Dimmer | 000-255 | 0-100% |
| 2 | Dimmer Fine | 000-255 | 0-100% |
| 3 | Red | 000-255 | 0-100% |
| 4 | Green | 000-255 | 0-100% |
| 5 | Blue | 000-255 | 0-100% |
| 6 | White | 000-255 | 0-100% |
| 7 | No Function | 000-009 | No Function |
| | Strobe | 010-081 | Strobe Slow -> Fast |
| | No Function | 082-091 | No Function |
| | Pulse Strobe | 092-163 | Pulse Strobe Slow -> Fast |
| | No Function | 164-173 | No Function |
| | Random Strobe | 174-245 | Random Strobe Slow -> Fast |
| | No Function | 246-255 | |
| 8 | Dimmer Speed | 000-255 | |
| 9 | Function Set | 000-255 | See Function List |

13CH Mode

| 13CH Mode | Function | DMX Value | Description |
|---|---|---|---|
| 1 | Dimmer | 000-255 | 0-100% |
| 2 | Dimmer Fine | 000-255 | 0-100% |
| 3 | Red | 000-255 | 0-100% |
| 4 | Green | 000-255 | 0-100% |
| 5 | Blue | 000-255 | 0-100% |
| 6 | White | 000-255 | 0-100% |
| 7 | No Function | 000-009 | No Function |
| | Strobe | 010-081 | Strobe Slow -> Fast |
| | No Function | 082-091 | No Function |
| | Pulse Strobe | 092-163 | Pulse Strobe Slow -> Fast |
| | No Function | 164-173 | No Function |
| | Random Strobe | 174-245 | Random Strobe Slow -> Fast |
| | No Function | 246-255 | |
| 8 | Colour Macro/CTO | 000-004 | Open/No Function |
| | Colour Macro 1-51 | 005-215 | Choose colours according to the macro list |
| | CTO Macro List | 216-255 | CTO (2700K-8000K) See Macro list |
| 9 | Dimmer Speed | 000-255 | S |
| 10 | Function Set | 000-255 | See Function List |
| 11 | Auto (1-22) | 000-255 | See Auto List |
| 12 | Auto Speed | 000-255 | Slow -> Fast |
| 13 | Dimmer Fade | 000-255 | Dimmer Fade Slow -> Fast |

25CH Mode

| 25CH Mode | Function | DMX Value | Description |
|---|---|---|---|
| 1 | Dimmer | 000-255 | 0-100% |
| 2 | Function Set | 000-255 | See Function List |
| 3 | Red | 000-255 | 0-100% |
| 4 | Green | 000-255 | 0-100% |
| 5 | Blue | 000-255 | 0-100% |
| 6 | White | 000-255 | 0-100% |
| | No Function | 000-009 | No Function |
| | Strobe | 010-081 | Strobe Slow -> Fast |
| | No Function | 082-091 | No Function |

| | | | |
|---|---|---|---|
| 7 | Pulse Strobe | 092-163 | Pulse Strobe Slow -> Fast |
| | No Function | 164-173 | No Function |
| | Random Strobe | 174-245 | Random Strobe Slow -> Fast |
| | No Function | 246-255 | |
| 8 | Colour Macro/CTO | 000-004 | Open/No Function |
| | Colour Macro 1-51 | 005-215 | Choose colours according to the macro list |
| | CTO Macro List | 216-255 | CTO (2700K-8000K) See Macro list |
| 9 | Dimmer Speed | 000-255 | |
| 10 | LED 1 Dimmer | 000-255 | 0-100% |
| 11 | LED 2 Dimmer | 000-255 | 0-100% |
| 12 | LED 3 Dimmer | 000-255 | 0-100% |
| 13 | LED 4 Dimmer | 000-255 | 0-100% |
| 14 | LED 5 Dimmer | 000-255 | 0-100% |
| 15 | LED 6 Dimmer | 000-255 | 0-100% |
| 16 | LED 7 Dimmer | 000-255 | 0-100% |
| 17 | LED 8 Dimmer | 000-255 | 0-100% |
| 18 | LED 9 Dimmer | 000-255 | 0-100% |
| 19 | LED 10 Dimmer | 000-255 | 0-100% |
| 20 | LED 11 Dimmer | 000-255 | 0-100% |
| 21 | LED 12 Dimmer | 000-255 | 0-100% |
| 22 | LED 13 Dimmer | 000-255 | 0-100% |
| 23 | LED 14 Dimmer | 000-255 | 0-100% |
| 24 | LED 15 Dimmer | 000-255 | 0-100% |
| 25 | LED 16 Dimmer | 000-255 | 0-100% |

32CH Mode

| 32CH Mode | Function | DMX Value | Description |
|---|---|---|---|
| 1 | Red LED 1&2 | 000-255 | 0-100% |
| 2 | Green LED 1&2 | 000-255 | 0-100% |
| 3 | Blue LED 1&2 | 000-255 | 0-100% |
| 4 | White LED 1&2 | 000-255 | 0-100% |
| 5 | Red LED 3&4 | 000-255 | 0-100% |
| 6 | Green LED 3&4 | 000-255 | 0-100% |
| 7 | Blue LED 3&4 | 000-255 | 0-100% |
| 8 | White LED 3&4 | 000-255 | 0-100% |
| 9 | Red LED 5&6 | 000-255 | 0-100% |

| | | | |
|---|---|---|---|
| 10 | Green LED 5&6 | 000-255 | 0-100% |
| 11 | Blue LED 5&6 | 000-255 | 0-100% |
| 12 | White LED 5&6 | 000-255 | 0-100% |
| 13 | Red LED 7&8 | 000-255 | 0-100% |
| 14 | Green LED 7&8 | 000-255 | 0-100% |
| 15 | Blue LED 7&8 | 000-255 | 0-100% |
| 16 | White LED 7&8 | 000-255 | 0-100% |
| 17 | Red LED 9&10 | 000-255 | 0-100% |
| 18 | Green LED 9&10 | 000-255 | 0-100% |
| 19 | Blue LED 9&10 | 000-255 | 0-100% |
| 20 | White LED 9&10 | 000-255 | 0-100% |
| 21 | Red LED 11&12 | 000-255 | 0-100% |
| 22 | Green LED 11&12 | 000-255 | 0-100% |
| 23 | Blue LED 11&12 | 000-255 | 0-100% |
| 24 | White LED 11&12 | 000-255 | 0-100% |
| 25 | Red LED 13&14 | 000-255 | 0-100% |
| 26 | Green LED 13&14 | 000-255 | 0-100% |
| 27 | Blue LED 13&14 | 000-255 | 0-100% |
| 28 | White LED 13&14 | 000-255 | 0-100% |
| 29 | Red LED 15&16 | 000-255 | 0-100% |
| 30 | Green LED 15&16 | 000-255 | 0-100% |
| 31 | Blue LED 15&16 | 000-255 | 0-100% |
| 32 | White LED 15&16 | 000-255 | 0-100% |

64CH Mode

| 64CH Mode | Function | DMX Value | Description |
|---|---|---|---|
| 1 | Red LED 1 | 000-255 | 0-100% |
| 2 | Green LED 1 | 000-255 | 0-100% |
| 3 | Blue LED 1 | 000-255 | 0-100% |
| 4 | White LED 1 | 000-255 | 0-100% |
| 5 | Red LED 2 | 000-255 | 0-100% |
| 6 | Green LED 2 | 000-255 | 0-100% |
| 7 | Blue LED 2 | 000-255 | 0-100% |
| 8 | White LED 2 | 000-255 | 0-100% |
| 9 | Red LED 3 | 000-255 | 0-100% |
| 10 | Green LED 3 | 000-255 | 0-100% |
| 11 | Blue LED 3 | 000-255 | 0-100% |
| 12 | White LED 3 | 000-255 | 0-100% |

| | | | |
|---|---|---|---|
| **13** | Red LED 4 | 000-255 | 0-100% |
| **14** | Green LED 4 | 000-255 | 0-100% |
| **15** | Blue LED 4 | 000-255 | 0-100% |
| **16** | White LED 4 | 000-255 | 0-100% |
| **17** | Red LED 5 | 000-255 | 0-100% |
| **18** | Green LED 5 | 000-255 | 0-100% |
| **19** | Blue LED 5 | 000-255 | 0-100% |
| **20** | White LED 5 | 000-255 | 0-100% |
| **21** | Red LED 6 | 000-255 | 0-100% |
| **22** | Green LED 6 | 000-255 | 0-100% |
| **23** | Blue LED 6 | 000-255 | 0-100% |
| **24** | White LED 6 | 000-255 | 0-100% |
| **25** | Red LED 7 | 000-255 | 0-100% |
| **26** | Green LED 7 | 000-255 | 0-100% |
| **27** | Blue LED 7 | 000-255 | 0-100% |
| **28** | White LED 7 | 000-255 | 0-100% |
| **29** | Red LED 8 | 000-255 | 0-100% |
| **30** | Green LED 8 | 000-255 | 0-100% |
| **31** | Blue LED 8 | 000-255 | 0-100% |
| **32** | White LED 8 | 000-255 | 0-100% |
| **33** | Red LED 9 | 000-255 | 0-100% |
| **34** | Green LED 9 | 000-255 | 0-100% |
| **35** | Blue LED 9 | 000-255 | 0-100% |
| **36** | White LED 9 | 000-255 | 0-100% |
| **37** | Red LED 10 | 000-255 | 0-100% |
| **38** | Green LED 10 | 000-255 | 0-100% |
| **39** | Blue LED 10 | 000-255 | 0-100% |
| **40** | White LED 10 | 000-255 | 0-100% |
| **41** | Red LED 11 | 000-255 | 0-100% |
| **42** | Green LED 11 | 000-255 | 0-100% |
| **43** | Blue LED 11 | 000-255 | 0-100% |
| **44** | White LED 11 | 000-255 | 0-100% |
| **45** | Red LED 12 | 000-255 | 0-100% |
| **46** | Green LED 12 | 000-255 | 0-100% |
| **47** | Blue LED 12 | 000-255 | 0-100% |
| **48** | White LED 12 | 000-255 | 0-100% |
| **49** | Red LED 13 | 000-255 | 0-100% |
| **50** | Green LED 13 | 000-255 | 0-100% |
| **51** | Blue LED 13 | 000-255 | 0-100% |

| | | | |
|---|---|---|---|
| 52 | White LED 13 | 000-255 | 0-100% |
| 53 | Red LED 14 | 000-255 | 0-100% |
| 54 | Green LED 14 | 000-255 | 0-100% |
| 55 | Blue LED 14 | 000-255 | 0-100% |
| 56 | White LED 14 | 000-255 | 0-100% |
| 57 | Red LED 15 | 000-255 | 0-100% |
| 58 | Green LED 15 | 000-255 | 0-100% |
| 59 | Blue LED 15 | 000-255 | 0-100% |
| 60 | White LED 15 | 000-255 | 0-100% |
| 61 | Red LED 16 | 000-255 | 0-100% |
| 62 | Green LED 16 | 000-255 | 0-100% |
| 63 | Blue LED 16 | 000-255 | 0-100% |
| 64 | White LED 16 | 000-255 | 0-100% |

73CH Mode

| 73CH Mode | Function | DMX Value | Description |
|---|---|---|---|
| 1 | Dimmer | 000-255 | 0-100% |
| 2 | Dimmer Fine | 000-255 | 0-100% |
| 3 | No Function | 000-009 | No Function |
| | Strobe | 010-081 | Strobe Slow -> Fast |
| | No Function | 082-091 | No Function |
| | Pulse Strobe | 092-163 | Pulse Strobe Slow -> Fast |
| | No Function | 164-173 | No Function |
| | Random Strobe | 174-245 | Random Strobe Slow -> Fast |
| | No Function | 246-255 | |
| 4 | Function Set | 000-255 | See Function List |
| 5 | Dimmer Speed | 000-255 | Slow->Fast |
| 6 | Function Set | 000-255 | See Function List |
| 7 | Auto (1-22) | 000-255 | See Auto List |
| 8 | Auto Speed | 000-255 | Slow -> Fast |
| 9 | Dimmer Fade | 000-255 | Dimmer Fade Slow -> Fast |
| 10 | Red LED 1 | 000-255 | 0-100% |
| 11 | Green LED 1 | 000-255 | 0-100% |
| 12 | Blue LED 1 | 000-255 | 0-100% |
| 13 | White LED 1 | 000-255 | 0-100% |
| 14 | Red LED 2 | 000-255 | 0-100% |
| 15 | Green LED 2 | 000-255 | 0-100% |
| 16 | Blue LED 2 | 000-255 | 0-100% |

| | | | |
|---|---|---|---|
| 17 | White LED 2 | 000-255 | 0-100% |
| 18 | Red LED 3 | 000-255 | 0-100% |
| 19 | Green LED 3 | 000-255 | 0-100% |
| 20 | Blue LED 3 | 000-255 | 0-100% |
| 21 | White LED 3 | 000-255 | 0-100% |
| 22 | Red LED 4 | 000-255 | 0-100% |
| 23 | Green LED 4 | 000-255 | 0-100% |
| 24 | Blue LED 4 | 000-255 | 0-100% |
| 25 | White LED 4 | 000-255 | 0-100% |
| 26 | Red LED 5 | 000-255 | 0-100% |
| 27 | Green LED 5 | 000-255 | 0-100% |
| 28 | Blue LED 5 | 000-255 | 0-100% |
| 29 | White LED 5 | 000-255 | 0-100% |
| 30 | Red LED 6 | 000-255 | 0-100% |
| 31 | Green LED 6 | 000-255 | 0-100% |
| 32 | Blue LED 6 | 000-255 | 0-100% |
| 33 | White LED 6 | 000-255 | 0-100% |
| 34 | Red LED 7 | 000-255 | 0-100% |
| 35 | Green LED 7 | 000-255 | 0-100% |
| 36 | Blue LED 7 | 000-255 | 0-100% |
| 37 | White LED 7 | 000-255 | 0-100% |
| 38 | Red LED 8 | 000-255 | 0-100% |
| 39 | Green LED 8 | 000-255 | 0-100% |
| 40 | Blue LED 8 | 000-255 | 0-100% |
| 41 | White LED 8 | 000-255 | 0-100% |
| 42 | Red LED 9 | 000-255 | 0-100% |
| 43 | Green LED 9 | 000-255 | 0-100% |
| 44 | Blue LED 9 | 000-255 | 0-100% |
| 45 | White LED 9 | 000-255 | 0-100% |
| 46 | Red LED 10 | 000-255 | 0-100% |
| 47 | Green LED 10 | 000-255 | 0-100% |
| 48 | Blue LED 10 | 000-255 | 0-100% |
| 49 | White LED 10 | 000-255 | 0-100% |
| 50 | Red LED 11 | 000-255 | 0-100% |
| 51 | Green LED 11 | 000-255 | 0-100% |
| 52 | Blue LED 11 | 000-255 | 0-100% |
| 53 | White LED 11 | 000-255 | 0-100% |
| 54 | Red LED 12 | 000-255 | 0-100% |
| 55 | Green LED 12 | 000-255 | 0-100% |

| | | | |
|---|---|---|---|
| **56** | Blue LED 12 | 000-255 | 0-100% |
| **57** | White LED 12 | 000-255 | 0-100% |
| **58** | Red LED 13 | 000-255 | 0-100% |
| **59** | Green LED 13 | 000-255 | 0-100% |
| **60** | Blue LED 13 | 000-255 | 0-100% |
| **61** | White LED 13 | 000-255 | 0-100% |
| **62** | Red LED 14 | 000-255 | 0-100% |
| **63** | Green LED 14 | 000-255 | 0-100% |
| **64** | Blue LED 14 | 000-255 | 0-100% |
| **65** | White LED 14 | 000-255 | 0-100% |
| **66** | Red LED 15 | 000-255 | 0-100% |
| **67** | Green LED 15 | 000-255 | 0-100% |
| **68** | Blue LED 15 | 000-255 | 0-100% |
| **69** | White LED 15 | 000-255 | 0-100% |
| **70** | Red LED 16 | 000-255 | 0-100% |
| **71** | Green LED 16 | 000-255 | 0-100% |
| **72** | Blue LED 16 | 000-255 | 0-100% |
| **73** | White LED 16 | 000-255 | 0-100% |

## MACRO & FUNCTION LIST

### Function List

| Function | DMX Value | Description |
|---|---|---|
| No Function | 000-044 | Open/No Function |
| Pixel On | 045-049 | Pixel Orientation |
| Pixel Off | 050-054 | Pixel Orientation |
| Dimmer Curve Linear | 055-059 | Linear Curve |
| Dimmer Curve Square Law | 060-064 | Square Law Curve |
| Dimmer Curve Inverse Square Law | 060-064 | Inverse Square Law Curve |
| Dimmer Curve S-Curve | 070-074 | S-Curve |
| No Function | 075-089 | Open/No Function |
| COLOR CAL ON | 090-094 | Colour Calibrated Output mode ON |
| COLOR CAL OFF | 095-099 | Colour Calibrated Output mode OFF |
| No Function | 100-114 | Open/No Function |
| Refresh Rate 600Hz | 115-119 | |
| Refresh Rate 1200Hz | 120-124 | |
| Refresh Rate 2400Hz | 125-129 | |
| Refresh Rate 4800Hz | 130-134 | |
| Refresh Rate 9800Hz | 135-139 | |
| Refresh Rate 12000Hz | 140-144 | |
| Refresh Rate 18000Hz | 145-149 | |
| No Function | 100-114 | Open/No Function |
| Illuminate Display | 250-255 | Turn On display |

### AUTO LIST

| Macro Number | Description | DMX Value |
|---|---|---|
| 0 | **No Function/OPEN** | 0-5 |
| 1 | **AUTO 1** | 6-10 |
| 2 | **AUTO 2** | 11-16 |
| 3 | **AUTO 3** | 17-22 |
| 4 | **AUTO 4** | 23-28 |
| 5 | **AUTO 5** | 29-34 |
| 6 | **AUTO 6** | 35-40 |
| 7 | **AUTO 7** | 41-46 |
| 8 | **AUTO 8** | 47-52 |
| 9 | **AUTO 9** | 53-58 |
| 10 | **AUTO 10** | 59-64 |

| | | |
|---|---|---|
| 11 | **AUTO 11** | 65-70 |
| 12 | **AUTO 12** | 71-76 |
| 13 | **AUTO 13** | 77-82 |
| 14 | **AUTO 14** | 83-88 |
| 15 | **AUTO 15** | 89-94 |
| 16 | **AUTO 16** | 95-100 |
| 17 | **AUTO 17** | 101-106 |
| 18 | **AUTO 18** | 107-112 |
| 19 | **AUTO 19** | 113-118 |
| 20 | **AUTO 20** | 119-125 |
| 21 | **AUTO 21** | 126-130 |
| 22 | **AUTO 22** | 131-255 |

AUTO SPEED LIST

| Macro Number | Description | DMX Value |
|---|---|---|
| 0 | **No Function/OPEN** | 0-1 |
| 1 | **Speed 1** | 2-27 |
| 2 | **Speed 2** | 28-55 |
| 3 | **Speed 3** | 56-83 |
| 4 | **Speed 4** | 84-111 |
| 5 | **Speed 5** | 112-139 |
| 6 | **Speed 6** | 140-167 |
| 7 | **Speed 7** | 168-195 |
| 8 | **Speed 8** | 196-223 |
| 9 | **Speed 9** | 224-251 |
| 10 | **Speed 10** | 252-255 |

Strobe List

| Strobe Functions | DMX Value | Description |
|---|---|---|
| No Function/OPEN | 000-009 | Open/No Function |
| Strobe 1-20HZ | 010-081 | Strobe Slow -> Fast |
| No Function/OPEN | 082-091 | Open/No Function |
| Pulse Strobe | 092-163 | Pulse Strobe Slow -> Fast |
| No Function/OPEN | 164-173 | Open/No Function |
| Random Strobe | 174-245 | Random Strobe Slow -> Fast |
| No Function/OPEN | 246-255 | Open/No Function |

Color Macro List (3CH Mode)

| Macro Number | Functions | DMX Value | RED | GREEN | BLUE |
|---|---|---|---|---|---|
| 0 | **No Function/OPEN** | 0-4 | | | |
| 1 | **Color 1** | 5-9 | | | |
| 2 | **Color 2** | 10-14 | | | |
| 3 | **Color 3** | 15-19 | | | |
| 4 | **Color 4** | 20-24 | | | |
| 5 | **Color 5** | 25-29 | | | |
| 6 | **Color 6** | 30-34 | | | |
| 7 | **Color 7** | 35-39 | | | |
| 8 | **Color 8** | 40-44 | | | |
| 9 | **Color 9** | 45-49 | | | |
| 10 | **Color 10** | 50-54 | | | |
| 11 | **Color 11** | 55-59 | | | |
| 12 | **Color 12** | 60-64 | | | |
| 13 | **Color 13** | 65-69 | | | |
| 14 | **Color 14** | 70-74 | | | |
| 15 | **Color 15** | 75-79 | | | |
| 16 | **Color 16** | 80-84 | | | |
| 17 | **Color 17** | 85-89 | | | |
| 18 | **Color 18** | 90-94 | | | |
| 19 | **Color 19** | 95-99 | | | |
| 20 | **Color 20** | 100-104 | | | |
| 21 | **Color 21** | 105-109 | | | |
| 22 | **Color 22** | 110-114 | | | |
| 23 | **Color 23** | 115-119 | | | |
| 24 | **Color 24** | 120-124 | | | |

| | | | | | |
|---|---|---|---|---|---|
| 25 | **Color 25** | 125-129 | | | |
| 26 | **Color 26** | 130-134 | | | |
| 27 | **Color 27** | 135-139 | | | |
| 28 | **Color 28** | 140-144 | | | |
| 29 | **Color 29** | 145-149 | | | |
| 30 | **Color 30** | 150-154 | | | |
| 31 | **Color 31** | 155-159 | | | |
| 32 | **Color 32** | 160-164 | | | |
| 33 | **Color 33** | 165-169 | | | |
| 34 | **Color 34** | 170-174 | | | |
| 35 | **Color 35** | 175-179 | | | |
| 36 | **Color 36** | 180-184 | | | |
| 37 | **Color 37** | 185-189 | | | |
| 38 | **Color 38** | 190-194 | | | |
| 39 | **Color 39** | 195-199 | | | |
| 40 | **Color 40** | 200-204 | | | |
| 41 | **Color 41** | 205-209 | | | |
| 42 | **Color 42** | 210-214 | | | |
| 43 | **Color 43** | 215-219 | | | |
| 44 | **Color 44** | 220-224 | | | |
| 45 | **Color 45** | 225-229 | | | |
| 46 | **Color 46** | 230-234 | | | |
| 47 | **Color 47** | 235-239 | | | |
| 48 | **Color 48** | 240-244 | | | |
| 49 | **Color 49** | 245-249 | | | |
| 50 | **Color 50** | 250-254 | | | |
| 51 | **Color 51** | 255-255 | | | |

CTO List (3CH Mode)

| Macro Number | CTO | DMX Value |
|---|---|---|
| 0 | **No Function/OPEN** | 0-4 |
| 1 | **2700K** | 8-29 |
| 2 | **3200K** | 30-51 |
| 3 | **3500K** | 52-73 |
| 4 | **4000K** | 74-95 |
| 5 | **4500K** | 96-117 |
| 6 | **5000K** | 118-139 |
| 7 | **5600K** | 140-161 |

| | | |
|---|---|---|
| 8 | **6000K** | 162-183 |
| 9 | **6500K** | 184-205 |
| 10 | **7000K** | 206-227 |
| 11 | **7500K** | 228-249 |
| 12 | **8000K** | 250-255 |

Color Macro List (other modes)

| Macro Number | Functions | DMX Value | RED | GREEN | BLUE |
|---|---|---|---|---|---|
| 0 | **No Function/OPEN** | 0-15 | | | |
| 1 | **Color 1** | 13-16 | | | |
| 2 | **Color 2** | 17-20 | | | |
| 3 | **Color 3** | 21-24 | | | |
| 4 | **Color 4** | 25-28 | | | |
| 5 | **Color 5** | 29-32 | | | |
| 6 | **Color 6** | 33-36 | | | |
| 7 | **Color 7** | 37-40 | | | |
| 8 | **Color 8** | 41-44 | | | |
| 9 | **Color 9** | 45-48 | | | |
| 10 | **Color 10** | 49-52 | | | |
| 11 | **Color 11** | 53-56 | | | |
| 12 | **Color 12** | 57-60 | | | |
| 13 | **Color 13** | 61-64 | | | |
| 14 | **Color 14** | 65-68 | | | |
| 15 | **Color 15** | 69-72 | | | |
| 16 | **Color 16** | 73-76 | | | |
| 17 | **Color 17** | 77-80 | | | |
| 18 | **Color 18** | 81-84 | | | |
| 19 | **Color 19** | 85-88 | | | |
| 20 | **Color 20** | 89-92 | | | |
| 21 | **Color 21** | 93-96 | | | |
| 22 | **Color 22** | 97-100 | | | |
| 23 | **Color 23** | 101-104 | | | |
| 24 | **Color 24** | 105-108 | | | |
| 25 | **Color 25** | 109-112 | | | |
| 26 | **Color 26** | 113-116 | | | |
| 27 | **Color 27** | 117-120 | | | |
| 28 | **Color 28** | 121-124 | | | |
| 29 | **Color 29** | 125-128 | | | |

| | | | | | |
|---|---|---|---|---|---|
| 30 | **Color 30** | 129-132 | | | |
| 31 | **Color 31** | 133-136 | | | |
| 32 | **Color 32** | 137-140 | | | |
| 33 | **Color 33** | 141-144 | | | |
| 34 | **Color 34** | 145-148 | | | |
| 35 | **Color 35** | 149-152 | | | |
| 36 | **Color 36** | 153-156 | | | |
| 37 | **Color 37** | 157-160 | | | |
| 38 | **Color 38** | 161-164 | | | |
| 39 | **Color 39** | 165-168 | | | |
| 40 | **Color 40** | 169-172 | | | |
| 41 | **Color 41** | 173-176 | | | |
| 42 | **Color 42** | 177-180 | | | |
| 43 | **Color 43** | 181-184 | | | |
| 44 | **Color 44** | 185-188 | | | |
| 45 | **Color 45** | 189-192 | | | |
| 46 | **Color 46** | 193-196 | | | |
| 47 | **Color 47** | 197-200 | | | |
| 48 | **Color 48** | 201-204 | | | |
| 49 | **Color 49** | 205-208 | | | |
| 50 | **Color 50** | 209-212 | | | |
| 51 | **Color 51** | 213-215 | | | |
| 1 | **2700K** | 216-218 | | | |
| 2 | **3200K** | 219-221 | | | |
| 3 | **3500K** | 222-224 | | | |
| 4 | **4000K** | 225-227 | | | |
| 5 | **4500K** | 228-230 | | | |
| 6 | **5000K** | 231-233 | | | |
| 7 | **5600K** | 234-236 | | | |
| 8 | **6000K** | 237-239 | | | |
| 9 | **6500K** | 240-242 | | | |
| 10 | **7000K** | 243-245 | | | |
| 11 | **7500K** | 246-248 | | | |
| 12 | **8000K** | 249-255 | | | |

Company info

Mail: info@eaglelite.dk
TLF: +45 27 58 72 31

WEB: https://eaglelite.eu/

Company: Eagle Lite
CVR: DK39524627