TA350ZC PRO

350W RGBALC LED ZOOM FRESNEL

The TA350CZ PRO is a high-power RGBALC LED Fresnel spotlight designed for theatres, studios, and advanced event lighting. Equipped with a 350W RGBALC COB LED engine (Red, Green, Blue, Amber, Lime, Cyan), it delivers intense output with seamless color mixing and a wide color temperature range from 2700K to 8000K. The motorized zoom range from 20° to 55° allows precise beam shaping from mid-spot to flood, ideal for larger stage and broadcast applications.
With a CRI of ≥95 (CT channel) and TLCI >90, the TA350CZ PRO ensures accurate and natural color rendering across all temperatures. 16-bit dimming, selectable dimmer curves, and flicker-free operation with adjustable PWM (up to 24.000Hz) provide smooth and professional control. It supports DMX512 and RDM, and offers direct access via an LCD display with rotary encoder.
The fixture includes 3-pin and 5-pin XLR DMX IN/OUT and Seetronic TRUE1 IN/OUT for power. Its robust aluminium housing is engineered for touring and installations, with intelligent temperature-controlled cooling for silent operation.

- 350W RGBALC LED
- CRI 95, on CT Channel
- Motorized zoom 20-55°
- Linear 16-bit Dimming w/ 4 Dimmer Curves
- Classic Fresnel glass lens
- Built-In Modes, Studio, theater, Stage.
- Halogen behaviour of LED
- User Selectable PWM modes
- Hardline DMX via 3-Pin or 5-Pin
- Smart temprature control
- AC Power Operation via PowerCON TRUE1 IN/THRU Connection
- Convective Heatsink – Low noise fans
- Included long bracket perfect for touring - optional short bracket, perfect for installation.

RGBALC
Color Mixing

LED
350W
RGBALC

MOTORIZED
ZOOM 20-55°

IP20

DMX/RDM

UK CA

CE

TA350ZC PRO

350W RGBALC LED ZOOM FRESNEL

SPECFICATION SHEET

OPTICAL PARAMETERS

Main LED:	350W RGBALC LED
Lumens:	TBA
Source Life Expectancy:	50,000 Hours
Zoom Range:	20-55°
TM-30/CRI/TLCI:	CRI≥95 (CT channel), CRI 85 (Full on)
Optional Attachment:	Color gel holder, Short Bracket
Selectable PWM:	600-24.000 Hz

DYNAMIC EFFECTS

Dimming Resolution:	16-bit Dimming
Dimmer Curves:	4
Stand-Alone Mode:	Selection of dimmer with rotary button
Built-in Automated Programs:	Yes
Sound Active Mode:	No
Master/Slave Mode:	Wired
Shutter/Strobe:	1 – 20 Hz

PHYSICAL

Ingress Protection Rating:	IP20, Indoor only
Cooling:	Convective Heatsink – low noise Design
Signal connection:	3-Pin or 5-Pin XLR IN/THRU
Power connection:	Seetronic True1 IP65
Dimensions (WxHxD)mm:	428 x 451 x 320
Weight:	11,0kg including barn doors

ELECTRICAL

Power Supply:	100-240V – 50/60Hz
Max Power Consumption:	380W / 1.65A @ 230V
Power factor:	>0.95
Inrush current:	20 A, 375 µs
Standy Power consumption:	15.0W
Power supply:	Overload protection, output overvoltage protection, over-temperature protection

BODY

Body:	Aluminum & ABS Plastic
Body Color:	Black
Lens Type:	Glass lens

COLOR SYSTEM

Color Mixing:	RGBALC & CT channel 2700K-8000K
Macros:	Built-In effects, dimmer modes, pwm & Strobe effects.

CONTROL

Protocols:	DMX512
DMX channels:	2 / 8 / 13 ch
Display:	TFT display
LED Color Calibration:	Yes

Stand-Alone, Master/Slave, Sound Active Modes

OPTIONAL ACCESSORIES:

2in1/4in1 FlightCase made in EU	Color Gel holders
Fresnell lens	Power Linking Cables
Barn Doors	Selflock Couplers

ACCESSORIES INCLUDED

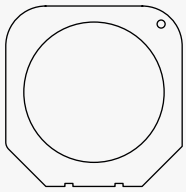

Gel frame

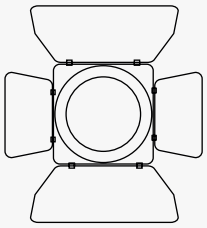

Barn Door

TA350ZC PRO

350W RGBALC LED ZOOM FRESNEL

SIZE

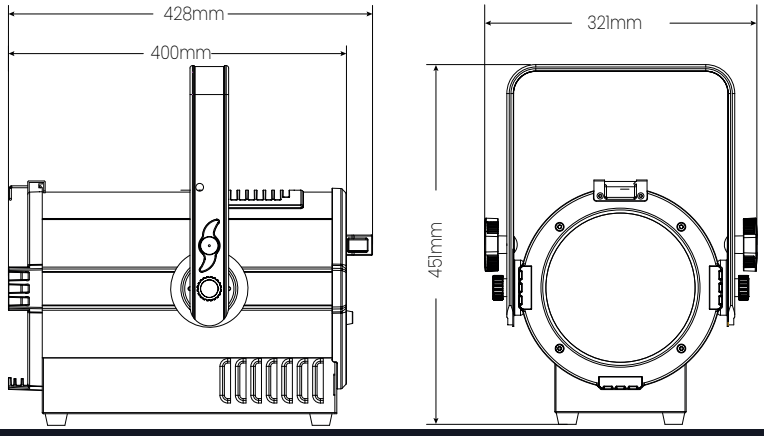

PHOTOMETRIC

Full on(Lux)	3.220	2.420	1.800	1.400	1.120	925

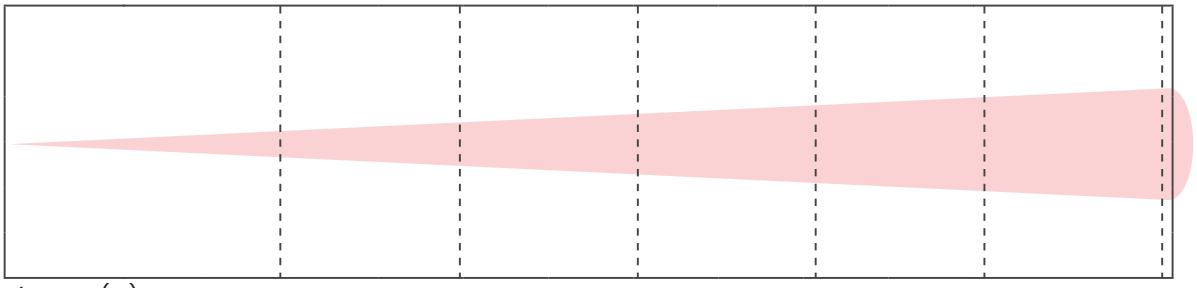

BEAM ANGLE 20°

Distance(M)	5	6	7	8	9	10
Beam Diameters(M)	1.49	1.79	2.09	3.40	3.83	4.25
Lux	430	363	273	220	182	146

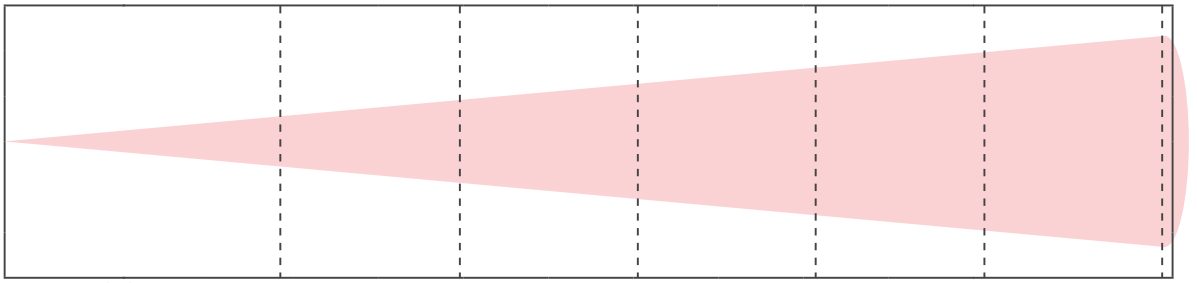

BEAM ANGLE 55°

Distance(M)	5	6	7	8	9	10
Beam Diameters(M)	6.50	7.80	9.1	10.4	11.7	13.0

COLOUR RENDERING INDEX

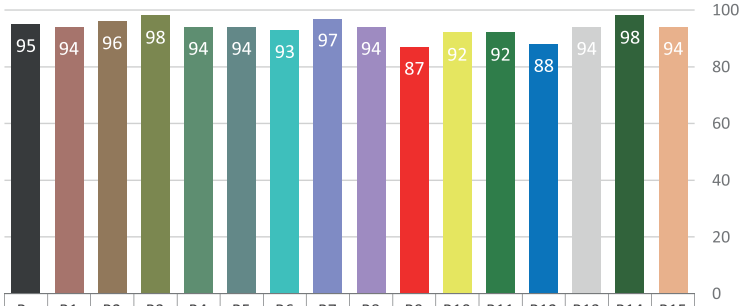

Ra	R1	R2	R3	R4	R5	R6	R7	R8	R9	R10	R11	R12	R13	R14	R15
95	94	96	98	94	94	93	97	94	87	92	92	88	94	98	94